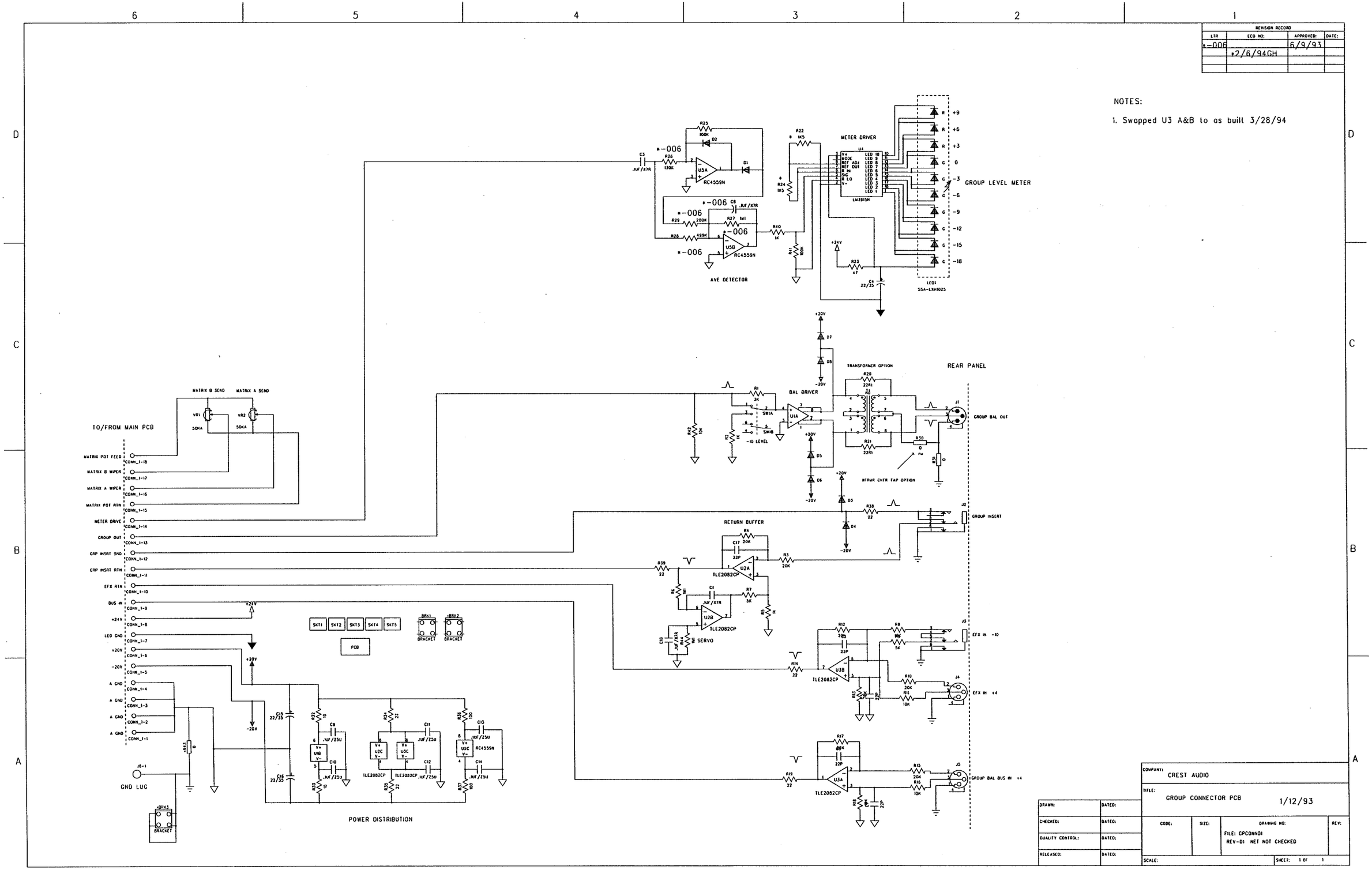

REVISION RECORD
LTR
ECO NO:
APPROVED:
DATE:
*-006
6/9/93
*2/6/94GH
NOTES:
1. Swapped U3 A&B to as built 3/28/94
METER DRIVER
GROUP LEVEL METER
AVE DETECTOR
TRANSFORMER OPTION
REAR PANEL
BAL DRIVER
GROUP BAL OUT
XFRMR CNTR TAP OPTION
RETURN BUFFER
GROUP INSERT
SERVO
EFX IN -10
EFX IN +4
GROUP BAL BUS IN +4
TO/FROM MAIN PCB
MATRIX B SEND
MATRIX A SEND
MATRIX POT FEED
MATRIX B WIPER
MATRIX A WIPER
MATRIX POT RTN
METER DRIVE
GROUP OUT
GRP INSRT SND
GRP INSRT RTN
EFX RTN
BUS IN
+24V
LED GND
+20V
-20V
A GND
GND LUG
PCB
BRACKET
POWER DISTRIBUTION
COMPANY: CREST AUDIO
TITLE: GROUP CONNECTOR PCB
1/12/93
DRAWN:
CHECKED:
QUALITY CONTROL:
RELEASED:
DATED:
CODE:
SIZE:
DRAWING NO:
FILE: CPCONN01
REV-01 NET NOT CHECKED
REV:
SCALE:
SHEET: 1 OF 1

Schematic #8

REVISION RECORD			
LTR	ECO NO:	APPRVD:	DATE:

EFX GAIN
VR1 50KA
C35 22P
C25 2U2
R1 10K
TLE2083CP
U1A
R5 1K
R8 8K2
R9 8K2
VR2
C2 IN
R14 47K
VR3 100K
R11 15K
R10 15K
C1 22N
BOOST HF CUT 100K
BOOST LF CUT
C20 22P
TLE2062CP
U1B
C3 .1UF/X
R12 10K
R13 1K
U2A
AD712
R15 1M1
EFX_PRE_FADER
EFX IN
JMP18-10

PFL
SW1A
SW1F
SW1B
SW1E
RB0 23K7
RB1 23K7
J1-39 PFL_L
J1-37 PFL_R
J1-35 PFL_REF
D4
J1-41 PFL_DC
J1-42
FADER RVRS
GROUP-FEED
SW8A
VR5 50KA
EFX_WIPER
SW8F
GROUP_WIPER
SW8C
SW8D
LED3
FADER RVRS
RED

OPTIONAL SCENE LEDS
+24V
R2 5K NU
LED8 NU
RED LED9 NU
RED LED10 NU
RED LED11 NU
RED LED12
GREEN
SW9B SCENE A
SW10B SCENE B
SW11B SCENE C
SW12B SCENE D
SW13B SAFE
R164 5K

C4 .1UF/X
R18 100K
R20 2W2
D8
U3A LM358
R19 47K
R153 5K
D3
R21 1K
LED1
GREEN
+20V

R22 47K
R23 47K
R152 47K
D1
D2
D32
U3B LM358
C5 22N
R24 2M2
R25 47K
R26 100K
R27 20K
R28 2K
R29 10K
LED2
RED

D19 NU
D20 NU
SAFE
SW13A
J2 NU
CONN FOR EXT COMP CNTRL
MUTE
SW14A
SW14B
MUTE A J1-57
MUTE B J1-58
MUTE C J1-59
MUTE D J1-60
D11
D12
D13
D14
SW9A
SW10A
SW11A
SW12A

R83 130K
R84 33K
R85 15K
Q3 2N5551
LED4
RED
R86 47K
R87 5K
D15
26 WAY CONNECTOR
JMP3
ONE J7-19
J7-20
J7-21
J7-22 GROUP FEED
J7-23
J7-24
J7-25
EIGHT J7-26
EXT MATRIX FEED GROUP SELECT 1 OF 8

R16 10K
R17 10K
Q1 J174
R31 33K
C21 22P
TLE2062CP
U4A
R30 200K
C6 .1UF/X
R50 200K
C7 .1UF/X
Q2 J174
R52 10K
R53 10K
R51 10K
C22 22P
TLE2062CP
U4B
EFX_PRE_FADER

R33 0
R34 10
R36 4K3
R35 10K
R37 6K8
R38 6K8
VR4 10KB
R39 6K8
R41 10
R40 10K
R42 6K8
R43 4K3
OP275GP
U5A
U5B
LEFT/ODD +
LEFT/ODD -
R48 10K
R49 10K
C23 22P
OP275GP
U6A
R44 10K
R45 10K
C24 22P
OP275GP
U6B
RIGHT/EVEN +
RIGHT/EVEN -

AUX POST
SW15A
SW15B
VR6 50KA
VR7 50KA
AUX 3-4
SW16A
SW16B
SW16C
SW16D
R88 20K
R89 20K
R90 20K
R91 20K
J1-1 AUX_1
J1-2 AUX_3
J1-3 AUX_2
J1-4 AUX_4
J1-5 AUX_1-4REF
R3 0 NU
R4 47K
J1-6 AUX_DEZOOT

RECORDING ONLY
J1-40 PFL_REF
AFL
SW1C
SW1D
R54 23K7 NU
R55 23K7 NU
J1-38 AFL_SUM_L
J1-36 AFL_SUM_R

MONO
SW2A
SW2B
SW2C
SW2D
R56 23K7
R57 23K7
R58 23K7
R59 23K7
J1-13 MONO+
J1-14 MONO-

L - R
SW3A
SW3B
SW3C
SW3D
R60 10K
R61 10K
R62 10K
R63 10K
J1-15 LEFT+
J1-16 LEFT-
J1-17 RIGHT+
J1-18 RIGHT-

1 - 2
SW4A
SW4B
SW4C
SW4D
R64 10K
R65 10K
R66 10K
R67 10K
J1-19 GROUP_1+
J1-20 GROUP_1-
J1-21 GROUP_2+
J1-22 GROUP_2-

3 - 4
SW5A
SW5B
SW5C
SW5D
R68 10K
R69 10K
R70 10K
R71 10K
J1-23 GROUP_3+
J1-24 GROUP_3-
J1-25 GROUP_4+
J1-26 GROUP_4-

5 - 6
SW6A
SW6B
SW6C
SW6D
R72 10K
R73 10K
R74 10K
R75 10K
J1-27 GROUP_5+
J1-28 GROUP_5-
J1-29 GROUP_6+
J1-30 GROUP_6-

7 - 8
SW7A
SW7B
SW7C
SW7D
R76 10K
R77 10K
R78 10K
R79 10K
J1-31 GROUP_7+
J1-33 GROUP_7-
J1-51 GROUP_8+
J1-35 GROUP_8-

MAIN RIBBON

BUS IN FROM CONN PCB
JMP18-9
R100 20K
R94 10K
C19 22P
SUM_-
SUM_+
FB1
FB2
C36 100P
U7A 2017
R93 10K
U8A AD712
R95 22
R166 1M1
C9 .1UF/X
R102 47K
C11 22N
R110 100K
R111 2K2
D17
U9A LM358
R154 5K
R108 1K
D7
LED5
GREEN
R109 47K
SW20A
SW20B
R113 5K
DIRECT OUT
GROUP OUT
JMP18-13
GROUP METER
JMP18-14
TO CONN PCB

JMP1
JMP2
GROUP SELECT 1-8
GROUP_1- GROUP_1+ GROUP_2- GROUP_2+ GROUP_3- GROUP_3+ GROUP_4- GROUP_4+
GROUP_5- GROUP_5+ GROUP_6- GROUP_6+ GROUP_7- GROUP_7+ GROUP_8- GROUP_8+

TO/FRM CONN PCB
INSERT SEND
INSERT RETURN
JMP18-12
JMP18-11
GROUP-FEED
SW17A PFL
SW17F
SW17B
SW17E
R114 23K7
R115 23K7
PFL_L
PFL_R
PFL_REF
R121 10K
R122 10K
C18 22P
U8B AD712
MATRIX POST
SW18A
SW18B
FADER RVRS
SW8B
SW8E
EFX_PRE_FADER
EFX_WIPER
GROUP_WIPER
R116 10K
R119 10K
CON1
FADER
R174 20K
C47 22P
Q4 J174
R117 33K
C17 22P
U8B AD712
R118 22
R120 22
R175 475
R107 47K
D21
D22
LM358
U9B
R101 2M2
R105 100K
R106 2K
R112 10K
LED6
RED
SW17E
SW17B
D9
PFL_DC
R103 20K
R104 47K
+20V
C46 .1UF/X
R173 200K
R172 47K
GROUP MUTE
SW19A
SW19B
R125 5K
LED7
MUTE
RED
C10 22/35 LUG
C12 22/35
-20V
R148 10
R151 10
R155 10
R156 10
J1-53 +20V_IN
J1-54
J1-47
J1-48 AGND
J1-49
J1-50
J1-55 -20V_IN
J1-56
60 WAY RIBBON
TO CONN PCB
JMP18-6
JMP18-4
JMP18-1
JMP18-3
JMP18-2
JMP18-5
R6 22
C26 .1UF/2
C38 .1UF/X
R161 221
C27 .1UF/2
C37 .1UF/X
R7 22
221 R162
TLE2082CP
R46 22
C28 .1UF/2
C29 .1UF/2
R47 22
AD712
OP275GP
R97 143
C30 .1UF/2
C31 .1UF/2
R96 143
2017
R98 22
C32 .1UF/2
C33 .1UF/2
R99 22
OP275GP
R168 221
C42 .1UF/X
C44 .1UF/X
C43 .1UF/X
C45 .1UF/X
R169 221
AD712
R170 221
R171 221
AD712

MATRIX A-B FEED TO/FRM CONN PCB
JMP18-18
JMP18-17
JMP18-16
JMP18-15
R123 20K
R124 20K
J7-3 MATRIX B SUM
J7-1 MATRIX A SUM
J7-2 MATRIX REF
J7-4

R128 4K3
R129 6KB
R127 10
R126 10K
R130 6KB
VR11 10KB
R131 6KB
R132 10
R133 10K
R134 4K3
R135 6KB
OP275GP
U10A
U10B
LEFT +
RIGHT +

RECORDING ONLY
AFL
R159 47K NU
R160 47K NU
SW17C
SW17D
PFL_REF
AFL_SUM_L
AFL_SUM_R

MONO
SW21A
SW21B
SW21C
R140 23K7
R141 23K7
R142 23K7
R143 23K7
MONO+
MONO-
LEFT +
LEFT -
R139 10K
C15 22P
R138 10K
OP275GP
U11A
R137 10K
C16 22P
R136 10K
OP275GP
U11B
RIGHT -
L - R
SW22A
SW22B
SW22C
SW22D
R144 10K
R145 10K
R146 10K
R147 10K
LEFT+
LEFT-
RIGHT+
RIGHT-

MECHANICAL PARTS
SKT1 SKT2 SKT3 SKT4 SKT5 SKT6
SKT7 SKT8 SKT9 SKT10 SKT11 SKT12
PCB1
PCB
7601544-03
69200006
TH1 TH2 TH3 TH4
BC1 BC2
MH1 MH2 MH3
BRACKET BRACKET BRACKET NU

TO CONN PCB
JMP18-8
J1-43
J1-44
J1-45
DGND
J1-46
JMP18-7 TO CONN PCB
R150 10
C14 22/35
R149 22
C34
C39 .1UF/2
R163 22
U3C
U9C
LM358
LM358

CRESTAUDIO

TITLE: GROUP MAIN REV-03 PCB			
DRAWN: TAZ/JRP	DATED: 8/30/94		
CHECKED:	DATED:		
QUALITY CONTROL:	DATED:		
RELEASED:	DATED:		
CODE:	SIZE:	DRAWING NO:	REV:
SCALE:		SHEET: OF	

Schematic #9